For Pumps and Parts
go to PumpVendor.com

The Most Trusted name in Pumps & Meters FILL-RITE.

12 Volt DC High Flow Pump Series FR4200

Model FR4210

DESCRIPTION OF INCLUDED MODELS

4210	Basic High-Flow 12 Volt DC Pump with 1" X 12' Hose & Nozzle, Telescoping Suction Tube and 18' of Battery Cable.
4211	Basic High-Flow 12 Volt DC Pump with 1" X 12' Hose & Nozzle, Telescoping Suction Tube, 18' of Battery Cable and Model 901 Meter Installed.
4410	Basic High-Flow 24 Volt DC Pump with 1" X 12' Hose & Nozzle, Telescoping Suction Tube and 18' of Battery Cable.
4411	Basic High-Flow 24 Volt DC Pump with 1" X 12' Hose & Nozzle, Telescoping Suction Tube, 18' of Battery Cable and Model 901 Meter Installed.

SAFETY LISTINGS

Approval Mark	Organization Description	File Number	Guide Number
	Underwriters Laboratories Inc., a nationally recognized independent organization for testing of products to ensure public safety. Recognized and accepted in USA,Canada and other countries	E43462	PTDR
	Compliance with applicable European standards	N/A	N/A
	Australian Certification Program - The Series FR4200 (12V, 76 LPM) and FR4400 (24V, 76 LPM) cerified under Aus EX 3620.	N/A	N/A

AVAILABLE OPTIONS

Option	Description	Shipping Weight (lbs)	Shipping Weight (kgs)
B	Upgrade to 300F7801, high-flow, 1" spout, automatic nozzle from standard manual nozzle. Includes 4200F9111 nozzle hook.	2.0	0.9
L	Unit equipped with meter registering liters in place of standard gallon meter.	-	-
-X001	Unit supplied less hose.	(5.0)	(1.4)
-X002	Unit supplied less telescoping suction pipe.	(2.0)	(0.9)
-X003	Unit supplied less nozzle.	-	-
-X005	Unit supplied less hose and nozzle.	(6.0)	(2.7)

ACCESSORIES

Part Number	Description
4200F9111	Nozzle Spout Hook (for automatic nozzles)
300F7773	Buna-N hose 1" X 12' with static wire, 1" ferrules
5200F1839	Telescoping steel suction pipe - 1"NPT threads - Extends 22" to 40"
VP1400F7687	Suction tube section - 14" male end to female end
VP1400F7686	Suction tube section - 15.25" male end to 15° angle cut end
700F3125	Manual unleaded nozzle with 1" inlet
300F7801	Automatic unleaded nozzle with 1" inlet and with 1" inlet (Note: Order one 4200F9111 Spout Hook to hang up nozzle on FR4210 Nozzle Boot)
400F6634	Wall mount bracket for this pump
311KTF7029	Particulate Filter Kit - 700ACCF7017 cast iron 1" adapter with 700ACCF7014 filter for Model FR4210
311KTF7030	Hydrosorb Filter Kit - 700ACCF7017 cast iron 1" adapter with 700ACCF7015 filter for Model FR4210
4211G7143	Particulate Filter Kit - 700ACCF7017 cast iron 1" adapter with 700ACCF7014 filter for Model FR4211
4211G7144	Hydrosorb Filter Kit - 700ACCF7017 cast iron 1" adapter with 700ACCF7015 filter for Model FR4211

PERFORMANCE

Maximum Outlet Pressure	14 PSI (0.96 BAR)
Maximum flow rate[1]	20 GPM (75.8 LPM)
Maximum Viscosity of fluid pumped	Diesel Fuel
Maximum ambient operating temperature	150 °F (66 °C)*
Minimum ambient operating temperature	-15 °F (-26 °C)*
Minimum dry vacuum	8 Inches of Mercury
Maximum suction lift**	9 Feet for Gasoline*** & 10 Feet for Diesel

[1] Nominal flow rate at nominal voltage using a standard hose and manual nozzle with low viscosity fluid.
* Consult factory for extreme temperature applications outside this range.
** The lift in feet is equivalent to the vertical distance from the surface of the fluid in the tank to the inlet of the

pump, PLUS the friction losses through the vertical and horizontal runs of pipe, all elbows and other fittings. The system should be designed to require a minimum amount of suction lift.
*** Lift of gasoline dependent on Reid's vapor pressure of the gasoline and it's temperature. The lower the vapor pressure and temperature, the higher the possible lift. Review Practical Gasoline Suction Lift Considerations to determine the lift for gasoline you might expect.

FLOW CURVE

(A) FR4210 with 1" X 15' hose and manual nozzle.

(B) FR4210 with 1" X 15' hose, manual nozzle and 900 meter.

(C) FR4210 with 1" X 15 hose and Husky 1+VIII automatic nozzle.

(D) FR4210 with 1" X 15' hose, Husky 1+VIII automatic nozzle and 900 meter.

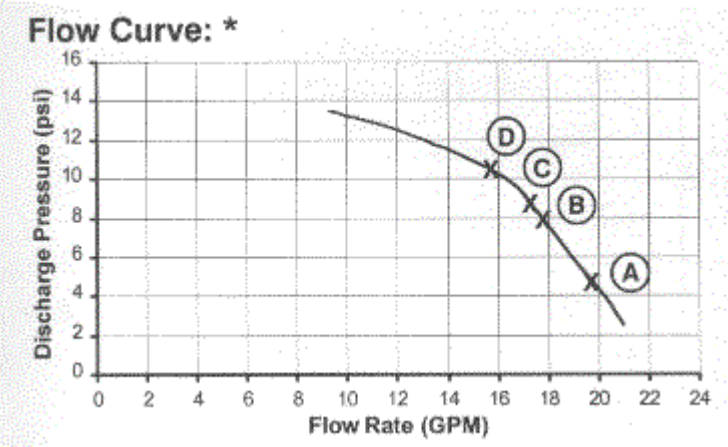

*Nominal flow curve for reference only. Based on 3 feet suction lift. Actual flow rate may vary.

FLUID COMPATIBILITY

The FR4200 Series pumps are compatible with the following fluids: Diesel, Gasoline, Kerosene, Mineral Spirits, Heptane and Hexane.
The FR4200 Series pumps are NOT compatible with the following fluids: Acetone, Ammonia, Benzene, Bleach, Hydrochloric Acid, Water, Ink and Toluene.
If in doubt about the compatibility of a specific fluid, contact the supplier of the fluid to check for any adverse reactions to the following wetted materials.

Cast Iron	Steel	Stainless Steel
Bronze/Iron	Carbon	Polyester
Aluminum	Cork/Buna N	Buna N
Ceramic	Fiber	Zinc Plated Steel
Acetal	Fluorocarbon (all pumps)	PPS (FR4211 & FR4411 only)

OUTLINE DRAWINGS

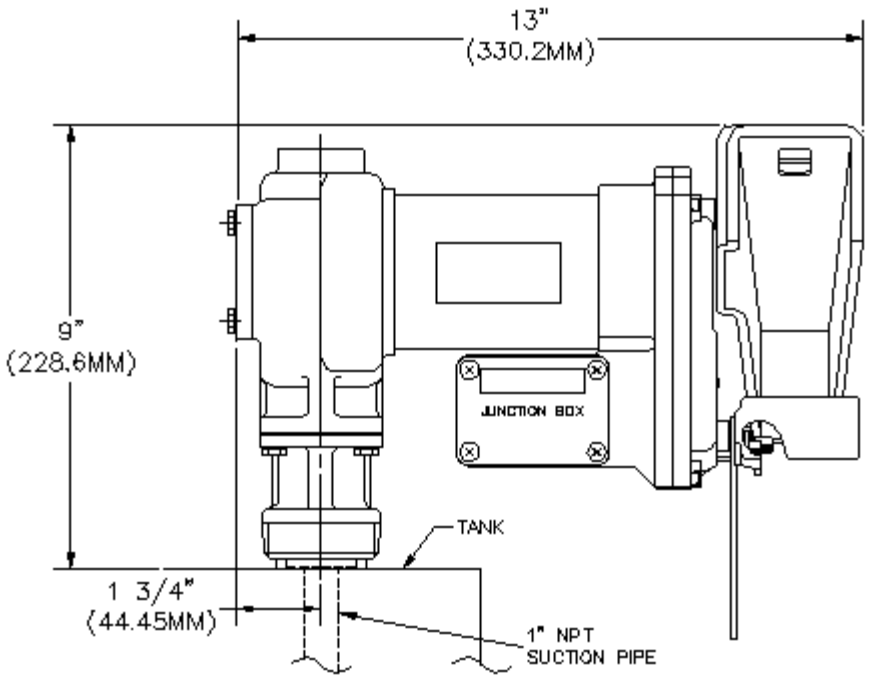

External threads in bung adapter are designed to fit the standard 2" NPT bung found on most barrels and tanks.

REPAIR

To maintain UL listing, motors that need repair must be taken to an authorized repair shop for service. Pumps must be thoroughly flushed and drained before being taken in for service.

MAINTENANCE

To keep the pump running at its best, periodically perform the following procedures:

1. Remove and clean the strainer screen (F0760) after every 20 hours of operation. Cleaning frequency depends on the fluid being pumped.
2. Using diesel, thoroughly flush pumps to be stored for long periods of time.

See meter's Owner's Operation & Safety Manual for its recommended maintenance procedures.

FREQUENTLY ASKED QUESTIONS

1. **My pump only pumps for a few minutes and then stops. What is happening?**

   Generally "short cycling" indicates the motor is drawing too much current from the power source for some reason, and the thermal relay is opening to protect the insulation from the resulting heat build up. If this is what is happening the thermal relay will reset after 10 to 20 minutes and the motor will again operate. The causes of too high a current are many. The pump is designed for low viscosity fluid, like diesel or gasoline, and will overheat if used to pump oil or other higher viscosity fluids. The inlet filter screen could be clogged. Bearings could be defective resulting in a drag on the armature shaft rotation.

   See the Troubleshooting Guide in your Owner's Manual packed with your unit or the copy available "on-line" in the Reference Documents section of this More Info page for things to check.

2. **There is fluid coming out of the small hole in the pump body. How do I stop it?**

   This small hole is described as the "weep hole" and is positioned to drain fluid that has leaked passed the dynamic seal between the pump and the motor. It is important that the leak be corrected as soon as possible to avoid damage to the front motor bearing. The problem could be as simple as foreign materials preventing the ceramic and carbon seal components from being in intimate contact, to as complex as a defective casting.

   See the Troubleshooting Guide in your Owner's Manual packed with your unit or the copy available "on-line" in the Reference Documents section of this More Info page for things to check.

3. **Why do I have to use the heavy wire supplied with the pump for connection to my battery?**

   Your pump is a commercial grade unit and as such draws a high current from your battery to do the work required. If that current were routed through a light wire, heating and possible damage of the wire, and reduced voltage at the pump would be the result. The wire supplied with your pump is sized to provide that optimum performance you demand and the pump can provide if properly installed.It is also recommended a 35 amp fuse be installed in the power line to insure safety, should a short circuit develop in the pump wiring. Although the pump draws slightly more than 20 amps in normal operation, motor starting currents are significantly higher, necessitating the higher rating on the fuse.

4. **Why are battery clips not provided with or on the wires, to connect to the battery?**

   It is not recommended that the electrical connections for this level of electrical current be made through battery clips of the type normally found on battery chargers. This type of connection often results in electrical losses and heating at the clips. This in turn could lead to arcing in the proximity of the battery where an explosive mixture including hydrogen gas is often present as a result of the normal charging and discharging of the battery.It is recommended that the wires be crimped or firmly bolted to the battery terminals to avoid the risk noted.