JABSCO®

For Pumps and Parts
go to PumpVendor.com

HoseCoil
Cockpit Washdown System
Flush Mount Enclosure

Cockpit Washdown System

The perfect solution for installing a washdown hose on your boat in an out-of-the-way location. This clever design will allow you to mount the enclosure flush into your deck or bulkhead. Cut a 6.75" (17.14 cm) hole and mount the enclosure with the supplied stainless steel fasteners. Simply plumb from a Jabsco/Flojet washdown pump to the solid brass supply fitting. Included are hose fittings that will help you adapt to popular sizes of marine plumbing. A fitting on the bottom of the enclosure is also provided for proper drainage. Never trip on a hose again!

DIMENSIONAL DRAWING

Inches (Millimetres)

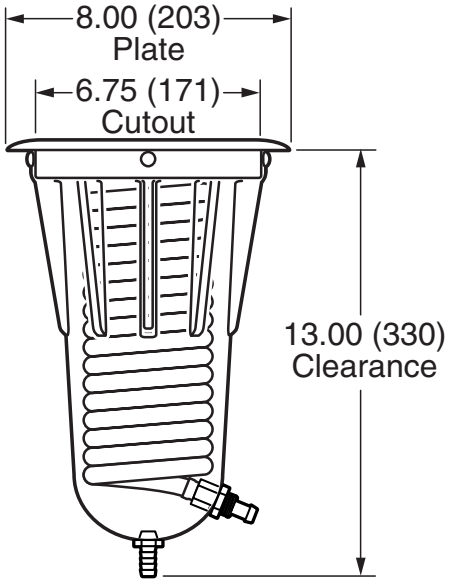

FEATURES

Enclosure Features:

- Lightweight durable plastic material
- Exposed surface UV stabilized
- Provides convenient stowing of integrated HoseCoil
- Easy to use and install

HoseCoil Features:

- 3/8" (10 mm) ID Polyurethane
- 90% usable length
- Self-Coiling
- Solid brass fittings
- UV Inhibitor

MODEL NO.	DESCRIPTION
31910-1115	Cockpit Washdown System Flush Mount Enclosure with 15' (4.57 m) Blue HoseCoil

Distributed by:

Jabsco

ITT Industries

Jabsco, 20 Icon, Foothill Ranch, CA 92610 — **USA**
Tel : + 1 949 609 5106 Fax : +1 949 859 1254

Jabsco, Bingley Road, Hoddesdon, Hertfordshire, EN11 0BU — **UK**
Tel : +44 (0) 1992 450 145 Fax : +44 (0) 1992 467 132

Fluid Products Canada, 55 Royal Road, Guelph, Ontario N1H 1T1 — **CANADA**
Tel : +1 519 821 1900 Fax : +1 519 821 5316

NHK Jabsco Co Ltd, 3-21-10, Shin - Yokohama, Kohoku-ku, Yokohama 222 — **JAPAN**
Tel : +81 (0) 45 475 8906 Fax : +81 (0) 45 475 8908

Jabsco GmbH, Oststraße 28, 22844 Norderstedt — **GERMANY**
Tel : +49 (0) 40 53 53 73 0 Fax : +49 (0) 40 53 53 73 11

Warranty: All products of the company are sold and all services of the company are offered subject to the company's warranty and terms and conditions of sale, copies of which will be furnished upon request. The information provided herein is for guidance only, it does not constitute a guarantee of the performance or specification of any individual product or component.

©Copyright 2003 ITT Industries -Jabsco

Discover Jabsco at www.jabsco.com

43001-0622 Rev: 07/2003