For Pumps and Parts
go to PumpVendor.com

10-24017 pump F7B-9

Pump No. Pump Nr.	Pumptype Pumptyp	Cam Kam No. Nr.	Thickness Tjocklek	Endcover Lock	Mark on endcover Märkes i lock
10-24017-3	F7B-9	01-42679	1/1 6.2	01-42441	F7B-9 + 10-24017-3 + man.year + week
10-24017-4	F7B-903	01-42442	2/3 4.7		F7B-903 + 10-24017-4 + man.year + week

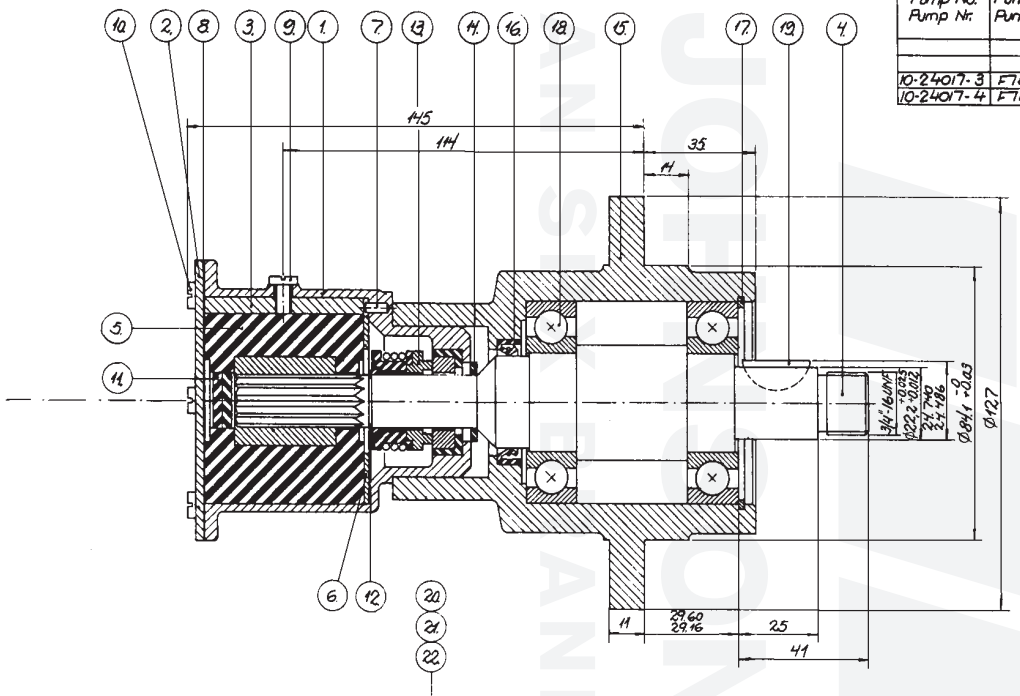

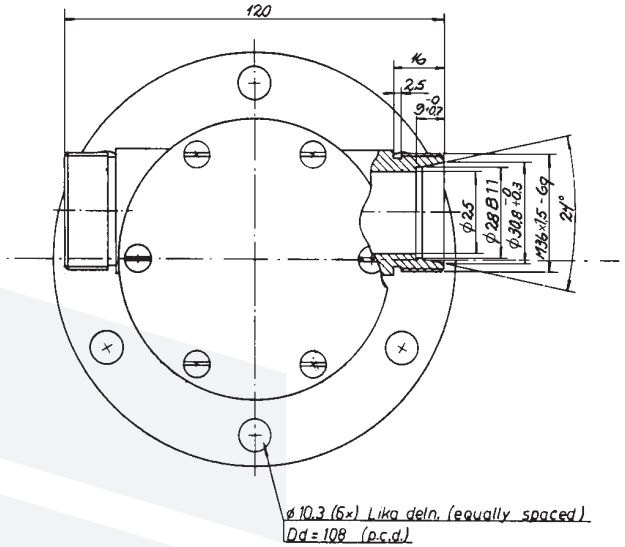

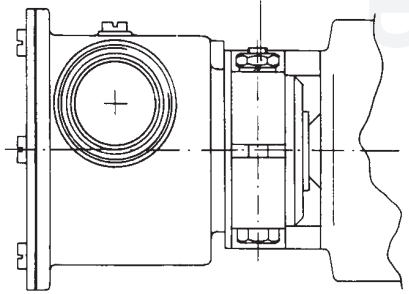

x) Not requited in complete pump
Ingår ej i kompl pump

F7B-900 Impeller pump
Art. No. 10-24017-1

Part no.	Description GB	Position	Quantity
01-32610	BODY F7B-9	1	1
01-45598	ENDCOVER F7B-9	2	1
01-42679	CAM 1/1 F7B/F70B	3	1
01-31964	SHAFT F7B-9	4	1
08-1028B	IMPELLER	5	1
01-42443	WEARPLATE F7B/F70B	6	1
01-42400	PIN F35B-/F7B/F70B	7	1
01-42445	GASKET F4B/F7B-	8	1
01-46794-07	SCREW 12-24UNCX8 BRASS	9	1
01-46794-05	SCREW 10-32UNFX8 BRASS	10	6
0.0370.516	EXT. CIRCLIP D16 DIN471 PHB	12	1
0.2247.050	MECH.SEAL COMPL 5/8" 106BT2C1	13	1
01-42402	SLINGER F5/F7B-	14	1
01-21884-1	BEARING HOUSING F7B-9	15	1
0.2233.002	LIP SEAL 28X38X7 DPSM	16	1
0.0371.062	RETAIN. RING BORE D62 DIN472 SPRST	17	1
0.3431.486	BALL BEARING 6206 ST	18	2
0.0144.001	BOLT 1/4"-20UNCX57 SS1943 STZN	20	1
0.0194.001	NUT 1/4"-20UNC SS1989 8.8ZN	21	1
0.0353.402	WASHER D6,5 X D11,8 X1,6	22	1

1003	P13	Ändring av lockmärkning	26.6.95	IG	PJ
	P12	10-24017-3/-4 tillkommit	11.5.83	JL.	
110	11	Lock 01-45598 var 01-42441 Märkn. i lock ändr.	22.4.83	JL.	
	10	Engelsk text tillkommit	6.5.77	OJ	
	9	Det.nr 22, VP.nr. 941906 var 941946	11.2.75	JL.	
	8	Det.nr. 17, VP.nr. 941533 var 941533			
	7	Det.nr. 7, 01-42400 var 01-42444			
	6	Textruta ändr.	5.2.1975	JL.	
	5	Det.nr. 16 ändr. fr. 29-118	27.1.75	JL.	
	4	Ritn.nr. ändr. fr. 24017			
	3	Det.nr. ändrade			
	2	Vy tillkommit			
	1	Lagerhus vridet 90°			

Tolerans där ej annat angives Arbetsmätt	Vinklar	Bearbetning	Ritning	Ritad	Godkänd	Smst. ritn.
			Datum	1.Feb.74		Xmn. nr.
			Sign.	JL.		Stycklista nr.
JP JOHNSON PUMP AB		Titel Johnson Impellerpump 10-24017				Skala 1:1

JOHNSON PUMP
AN SPX BRAND

The product, i.e. concept, design and construction, is the property of SPX Johnson Pump Marine AB