article number 10-24076-1 pump F5B-9

For Pumps and Parts
go to PumpVendor.com

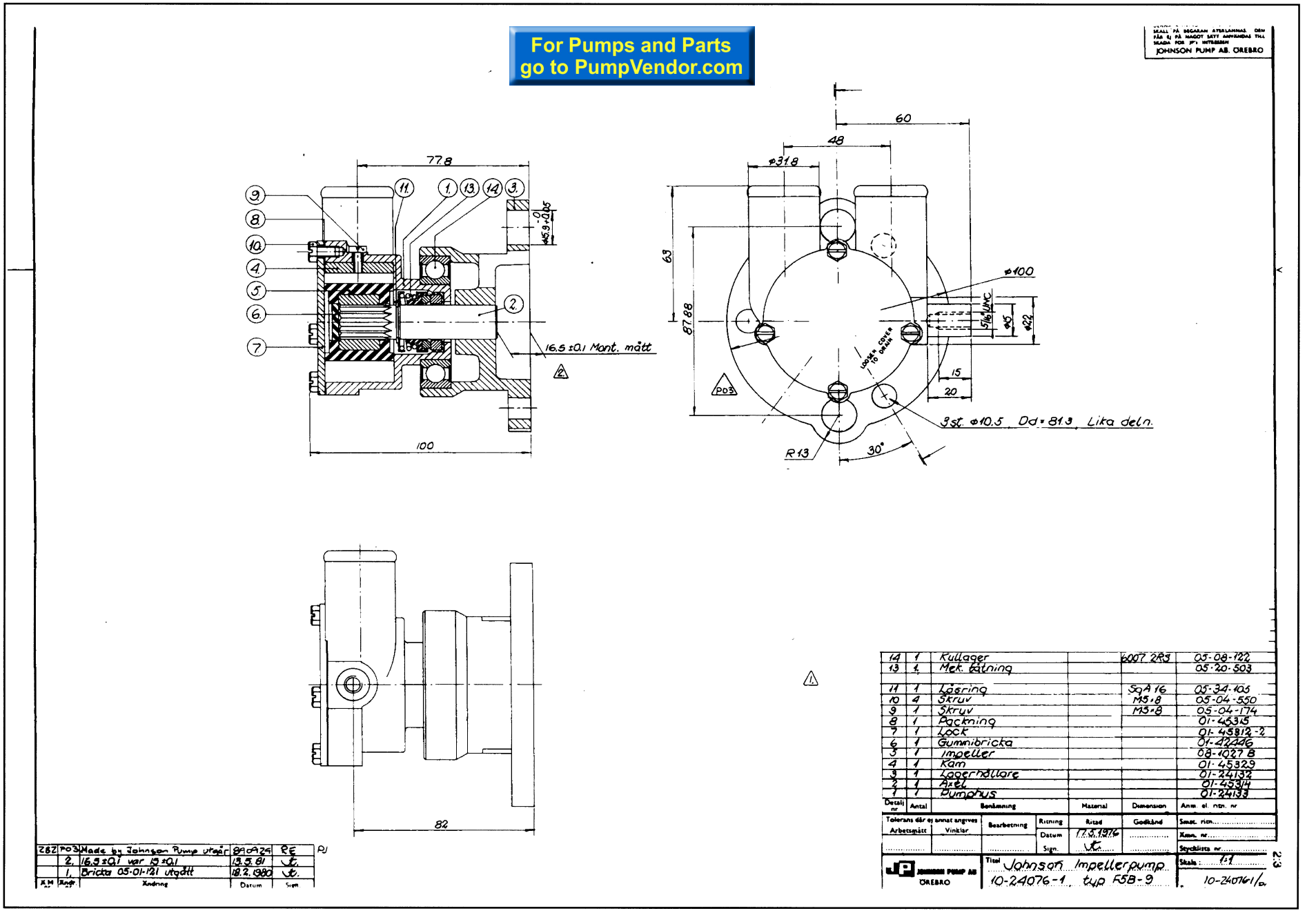

The product, i.e. concept, design and construction, is the property of Johnson Pump AB