Little GIANT®
PondWorks®

For Pumps and Parts
go to PumpVendor.com

PE Series

115V • 60Hz • c UL SP®

475 GPH Pond Pump

Item No. 566612 Model PE-2.5F-PW

Shut Off	Watts/ Amps	Weight	Discharge	Cord (ft)
13.0	80/1.4	5.33	1/2” MNPT	15

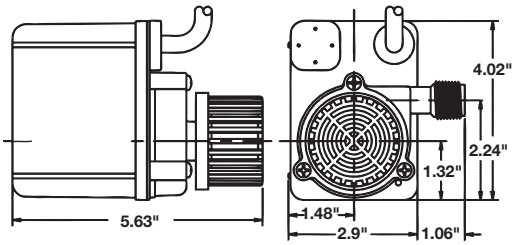

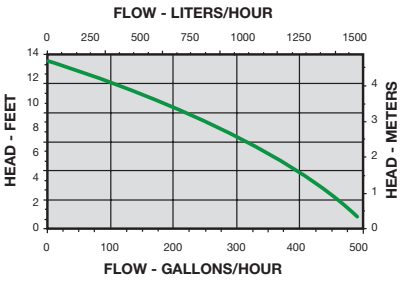

300 GPH Pond Pump

Item No. 566611 Model PE-2F-PW

Shut Off	Watts/ Amps	Weight	Discharge	Cord (ft)
12.0	47/.8	4.83	1/4” MNPT	15

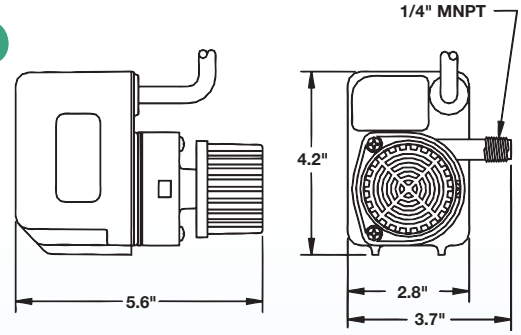

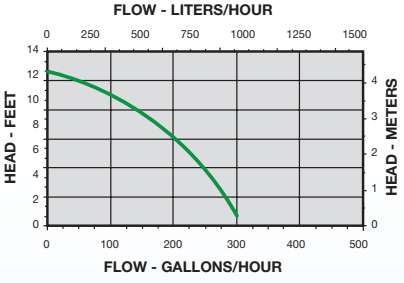

170 GPH Pond Pump

Item No. 566608 Model PE-1F-PW

Shut Off	Watts/ Amps	Weight	Discharge	Cord (ft)
7.0	36/.6	3.67	1/4” MNPT	15

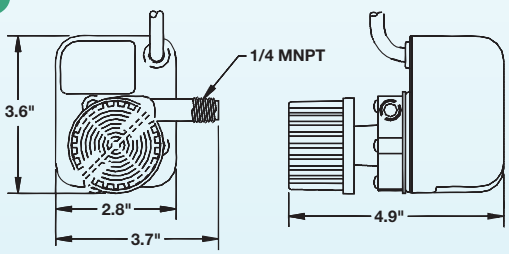

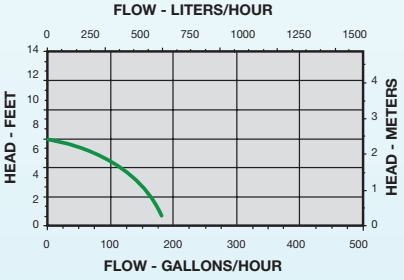

Franklin Electric
PO Box 12010 • Oklahoma City, OK 73127
Phone: 888.956.0000 • Fax: 800.701.8046 E-mail: customerservice@littlegiant.com