For Pumps and Parts go to PumpVendor.com



# BRONZE CENTRIFUGAL PUMPS

## CENTRIFUGAL PUMPS SERIES 83PB

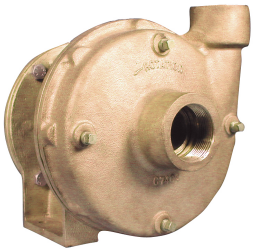

## FEATURES

- All Bronze
- Mechanical Face Type Seal
- Fluoroelastomer (S10) or Polytetrafluoroethylene (PTFE) (S11) Seals Available on Special Order
- Heavy Duty Ball Bearings - Designed for Pulley
- Drive Applications
- Stainless Steel Shaft
- Field Convertible to Close Coupled Unit Using
- Standard Keyed Shaft “C” Flange Motor
- May Be Operated with the Shaft Horizontal or Vertical

## DRIVE

The pedestal centrifugal pumps can be direct driven by electric motors at either 3450 R.P.M. or 1725 R.P.M. Performance for both speeds are shown in the curves above. The 81PB pedestal centrifugal pump can be pulley driven at any desired intermediate speed.

Because of the centrifugal pump impeller and body design, rotation must be as shown in the dimension diagram. Standard factory rotation is clockwise facing the pump shaft. If the pump is driven in the opposite direction it will pump only a very small amount.

## LIQUIDS AND TEMPERATURE

Bronze pumps are suitable for most common liquids in the PH-range from 4 to 11. The temperature limit for bronze pumps is 212o F, higher temperatures are possible with fluoroelastomer or Chemlon seals. If in doubt, consult with factory. Because centrifugal pumps are more efficient at higher shaft speeds, pumping of viscous or thick liquids is difficult. It is possible to lose as much as 40% pump performance when attempting to pump liquids of viscosity equal to S.A.E. 30 oil at room temperature. S.A.E. 30 oil at room temperature has a viscosity of 2000 Saybolt Seconds Universal. More viscous liquids are not recommended for centrifugal pumps.

Because centrifugal pumps are more efficient at higher shaft speeds, pumping of viscous or thick liquids is difficult. It is possible to lose as much as 40% pump performance when attempting to pump liquids of viscosity equal to S.A.E. 30 oil at room temperature. S.A.E. 30 oil at room temperature has a viscosity of 2000 Saybolt Seconds Universal. More viscous liquids are not recommended for centrifugal pumps. Heavy liquids can be pumped; however, they demand more horsepower in direct ratio to the weight of water. For example, carbon tetrachloride has a specific gravity of 1.6 which means it is 1.6 times heavier than water and horsepower required is 1.6 times water horsepower.

Bronze pumps are suitable for most common liquids in the PH range from 4 to 11. The temperature limit for bronze pumps is 212oF, higher temperatures are possible with Fluoroelastomer or Polytetrafluoroethylene (PTFE) seals.

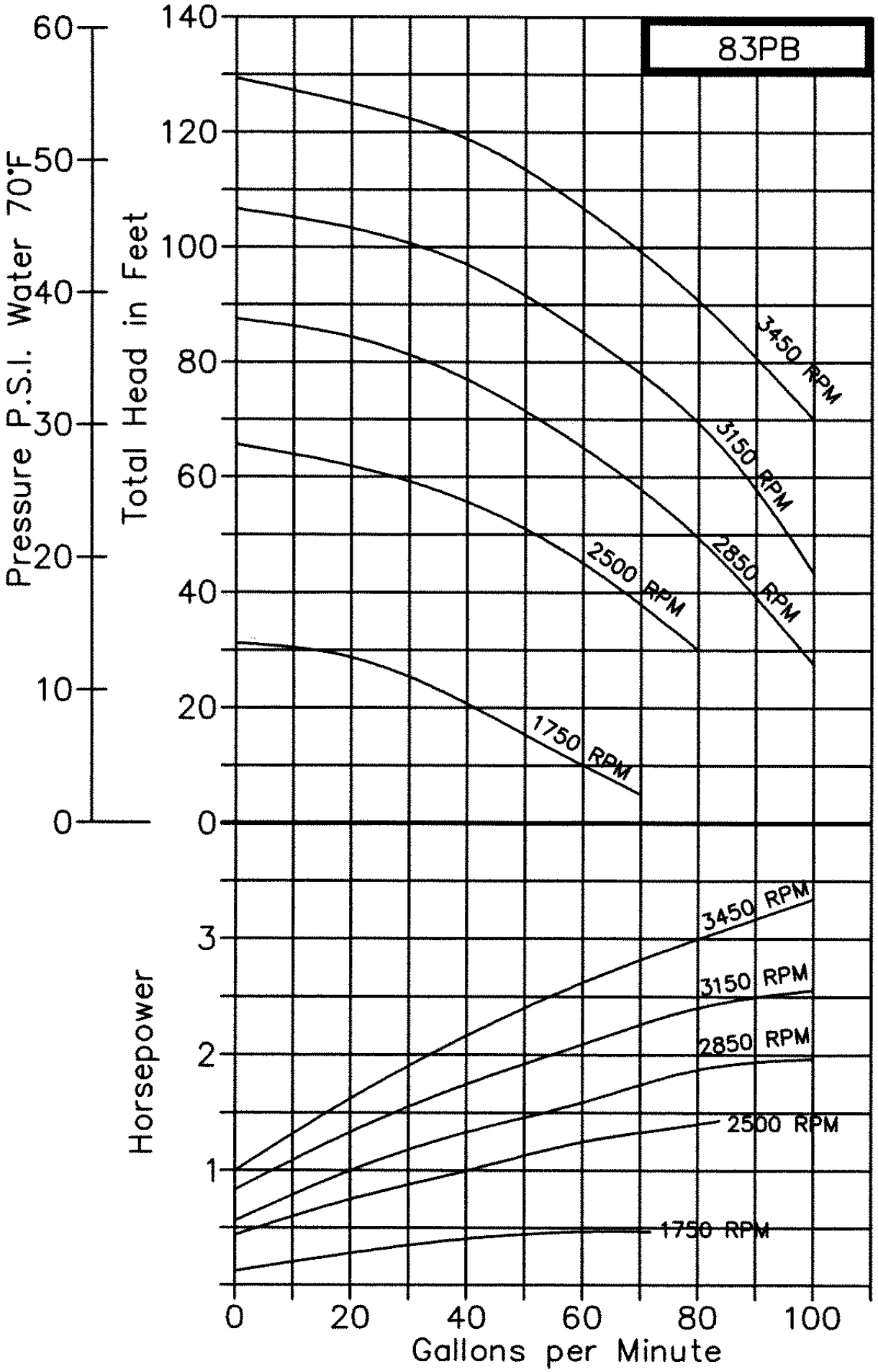
83PB
Pressure P.S.I. Water 70°F
Total Head in Feet
Horsepower
Gallons per Minute
3450 RPM
3150 RPM
2850 RPM
2500 RPM
1750 RPM
0
10
20
30
40
50
60
0
20
40
60
80
100
120
140
1
2
3
0
20
40
60
80
100

## SUCTION LIFT

This centrifugal pump is not self priming. Normally these pumps must be installed below the liquid level so that the liquid flows to the pump by gravity. However, if a foot valve is used at the beginning of the suction line and all air is bled from the suction line and pump by careful manual priming, these pumps will lift liquid on the suction side up to 15 ft. Such a system is only as positive as the ability of the foot valve to seal and keep the suction line and pump full of liquid. If the foot valve should leak, the pump will not prime.

## EXPLODED VIEW AND PARTS LIST

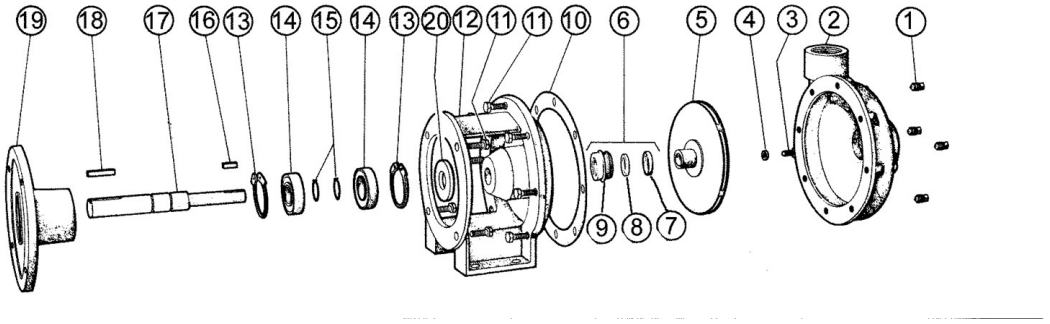


| | 1 | 2 | 3 | 4 | 5[1] | 6[1] | 7[2] | 8[2] | 9[2] | 10[1] | 11 | 12 | 13 | 14 | 15 | 16 | 17 | 18 | 19 | 20 | |
|---|---|---|---|---|---|---|---|---|---|---|---|---|---|---|---|---|---|---|---|---|---|
| Pump No. | Pipe Plug | Body | Screw | Lock-washer | Impeller Assembly | Seal Assembly | Seal Seat | Seal Wearface | Seal Head | Gasket | Screws | Adapter | Retaining Ring | Ball Bearing | Retaining Ring | Key | Shaft | Key | Bearing Plate | Slinger | **Repair Kit** |
| | 4 Req'd | 1 Req'd | 1 Req'd | 1 Req'd | 1 Req'd | 1 Req'd | 1 Req'd | 1 Req'd | 1 Req'd | 1 Req'd | 12 Req'd | 1 Req'd | 2 Req'd | 2 Req'd | 2 Req'd | 1 Req'd | 1 Req'd | 1 Req'd | 1 Req'd | 1 Req'd | |
| 83PB | 5395 | 7585 | 7656 | 7395 | 32353 | 32346 | 7427 | 7426 | 5377 | 7425 | 5411 | 7586 | 6053 | 5884 | 5885 | 7428 | 7455 | 6845 | 7587 | 7447 | 10953 |
| 83PBS-10 | 5395 | 7585 | 7656 | 7395 | 32353 | 32360 | 7427 | 7426 | 6141 | 7425 | 5411 | 7586 | 6053 | 5884 | 5885 | 7428 | 7455 | 6845 | 7587 | 7447 | 12267 |
| 83PBS-11 | 5395 | 7585 | 7656 | 7395 | 32427 | 32211 | N/A | N/A | N/A | 7425 | 5411 | 7586 | 6053 | 5884 | 5885 | 7428 | 7455 | 6845 | 7587 | 7447 | 12268 |

[1] These parts are included in the Repair Kit. [2] Seal parts sold only as seal assembly - item 6.

## DIMENSIONS

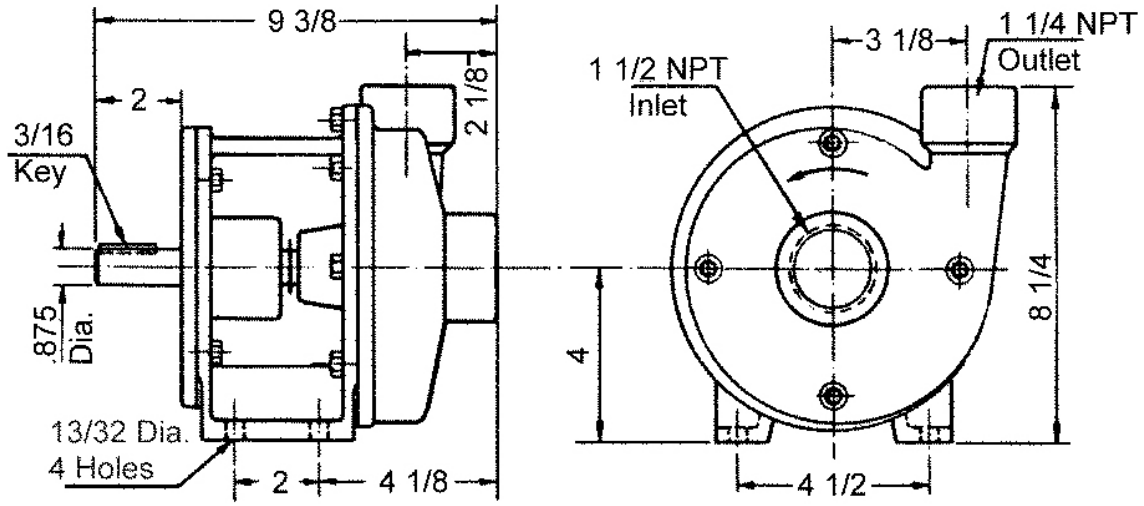
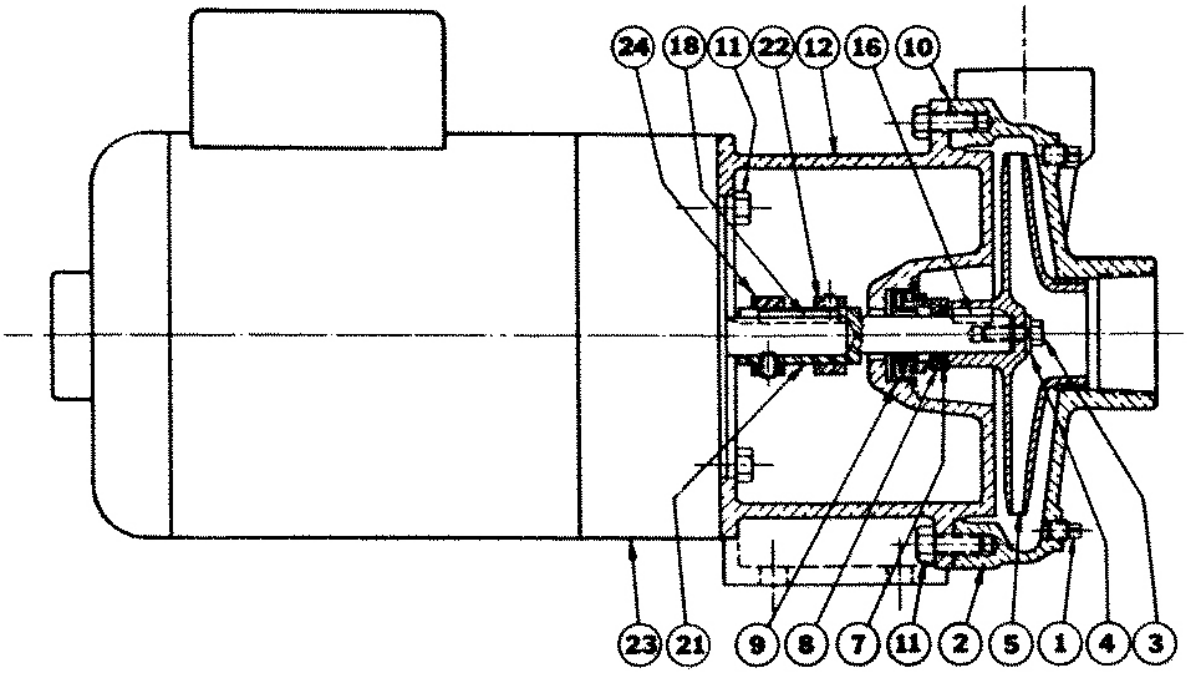
## WITH MOTOR