CHRYSLER BLUEPRINT PS-53 250 11-89

G905

PARTS LIST

ITEM	DESCRIPTION	PART Nº	QTY.	
1	SHAFT	19252	1	
2	LIP SEAL	18570	1	Ⓔ
3	EXT. RETAINING RING	4258	3	
4	BODY	19253	1	
5	BALL BEARING	12211	2	
6	SPACER	5133	1	
7	INT. RETAINING RING	4259	1	
8	MECHANICAL SEAL	12314	1	
9	SEAT - SEAL	12256	1	
10	WASHER	4264	1	
11	HOUSING	19201	1	
12	FILL. HD. CAPSCREW	19256	4	
13	GASKET	19257	1	
14	COVER PLATE	19255	1	
15	IMPELLER	9000	1	
16	KEY	18576	1	
17	END PLATE	19254	1	
18	O-RING GASKET	19964	2	ⒷⒹ

For Pumps and Parts
go to PumpVendor.com

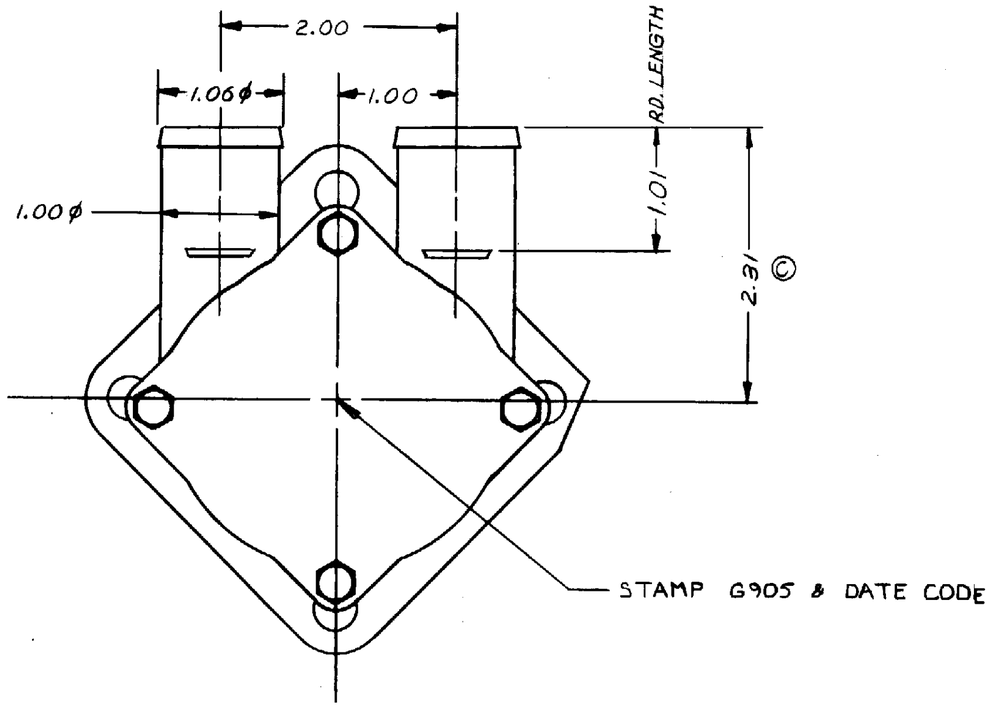

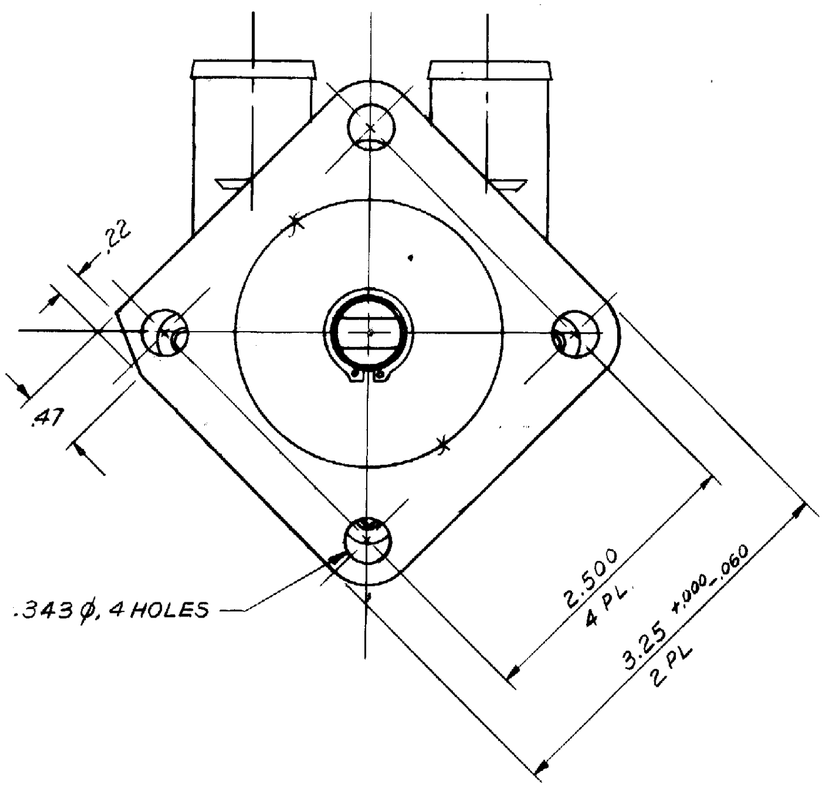

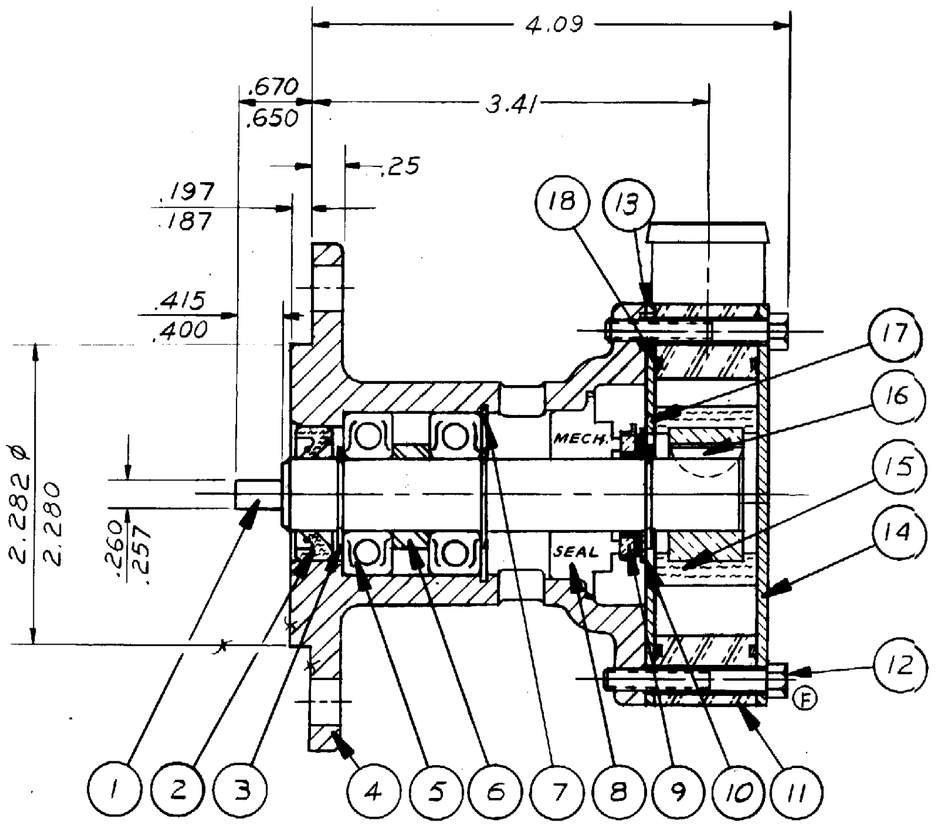

REV.	DESCRIPTION	APPR	DATE
F	CORRECTED FRONT VIEW OF DET. #12		
E	WAS 10519	TLG	6/24/92
D	WAS No 19274	KRS	6/22/90
C	2.31 PORT HEIGHT WAS 2.06	AVB	6/28/90
B	O-RING GASKET Nº 19274 CHANGED	AVB	5/8/90
A	ASSEMBLY REVISED	KB	5/8/90

UNLESS OTHERWISE SPECIFIED
CAST DIMENSIONS ± .02
FILLETS & RADII .06
FINISH STOCK .07
MACHINING TOLERANCE, INCHES
XX ± .01, XXX ± .005
SURFACE ROUGHNESS √
ANGLES ± 0° 30'
CORNER BREAKS .01 MAX.

FLATNESS .0015 IN/IN
SQUARENESS .0015
CONCENTRICITY .002
ROUNDNESS .0005
RUNOUT .002

SHERWOOD
A DIVISION OF HYPRO CORPORATION
6331 E. JEFFERSON AVE. • DETROIT, MICHIGAN 48207

DRAFTSMAN	DATE	CHECKER	DATE	PROJ. NO.
AVB	12/27/89			692

TITLE: RUBBER IMPELLER PUMP ASSEMBLY

MATERIAL: SEE DETAILS

DWG. NO.: G905