SHURflo®
First in Fluid Innovation

For Pumps and Parts
go to PumpVendor.com

PRODUCT DATA SHEET

MODEL: 8000-953-238

SPECIFICATIONS:

MODEL NUMBER: 8000-953-238
PUMP DESIGN: Positive Displacement 3 Chamber Diaphragm Pump
CHECK VALVE: (2-Way Op.) Prevents Reverse Flow & 6 Ft. Head Forward Flow
CAM: 3.0 Degree
MOTOR: Permanent Magnet, P/N 11-127-10
VOLTAGE: 24 VDC Nominal
PRESSURE SWITCH: Adjustable Shut-Off (Range 80-100 PSI)
Factory Set @100 PSI, Turn On 85 PSI ±5 PSI
LIQUID TEMPERATURE: 180 Degrees Fahrenheit (82 Degrees Centigrade) Max.
PRIME: Self-Priming Up To 10 Ft. Vertical,
Max. Inlet Pressure 30 PSI (2.1 Bar)
PORTS: 3/8"-18 NPT Female
MATERIAL OF CONSTRUCTION:
PLASTICS- Nylon
VALVES- EPDM
DIAPHRAGM- Santoprene
FASTENERS- Zinc or Cad Plated Steel
NET WEIGHT: 4.7 Lbs (2.13 Kg)
DUTY CYCLE: Intermittent (See Temperature Rise Chart)
TYPICAL APPLICATIONS: Industrial Spraying

DIMENSIONS:

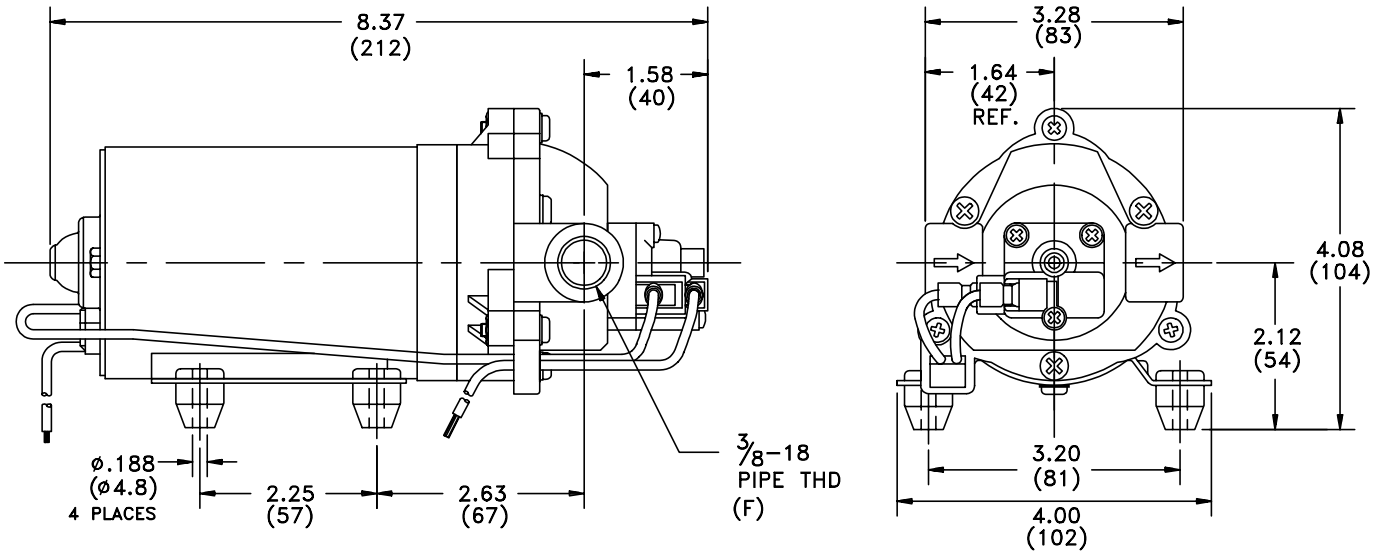

MODEL: 8000-953-238

TEMPERATURE RISE

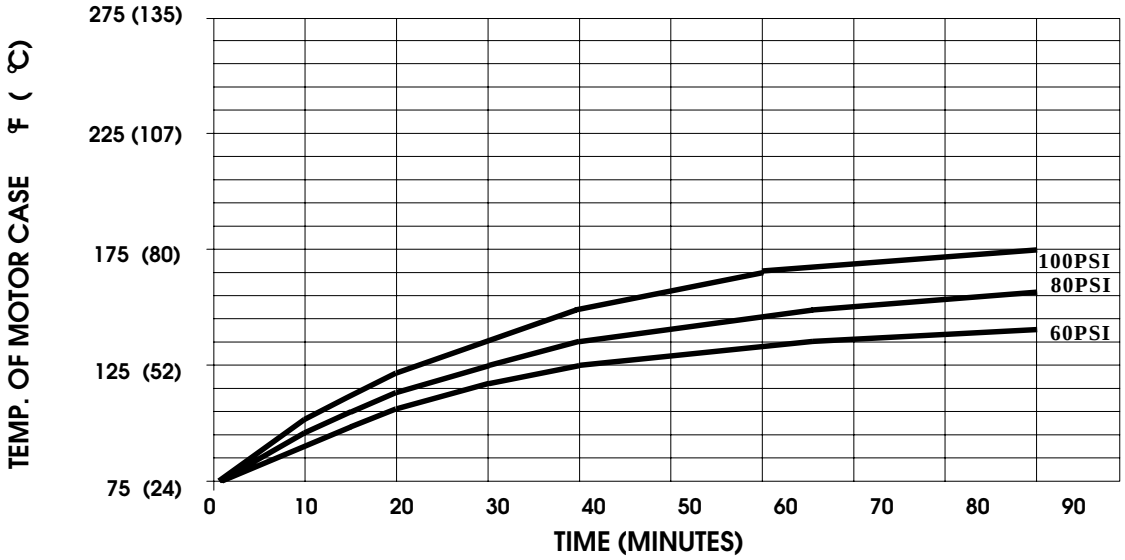

THIS GRAPH IS FOR USE AS A DESIGN GUIDE. IT IS BASED ON RUNNING CONTINUOUSLY WITH AN AMBIENT TEMPERATURE OF 70° F IN STILL AIR.

TYPICAL PERFORMANCE

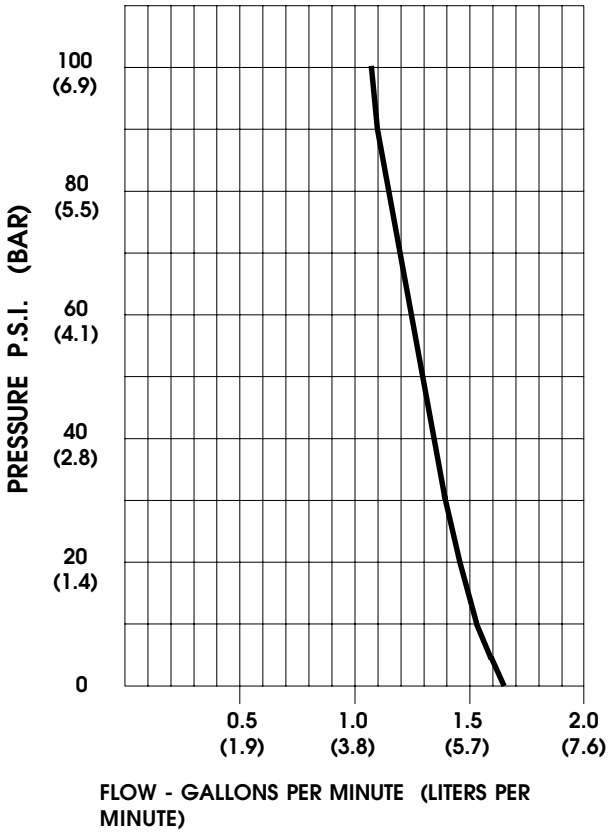

PRESSURE (PSI)	FLOW (GPM/LIT)	RPM MIN/MAX	CURRENT (AMPS)	VOLTAGE (VOLTS)
OPEN	1.62/6.1	2310/2320	1.6	24VDC
10	1.52/5.8	2280/2285	2.0	"
20	1.45/5.5	2240/2250	2.4	"
30	1.39/5.3	2200/2220	2.7	"
40	1.34/5.1	2170/2195	3.0	"
50	1.29/4.9	2135/2170	3.3	"
60	1.24/4.7	2105/2150	3.6	"
70	1.19/4.5	2075/2115	3.9	"
80	1.15/4.4	2040/2090	4.2	"
90	1.11/4.2	2010/2060	4.4	"
100	1.07/4.0	1965/2005	4.7	"

-SPECIFICATIONS SUBJECT TO CHANGE WITHOUT NOTICE.
-ALL DATA BASED ON TESTING WITH WATER.

5900 KATELLA AVENUE, CYPRESS CA. 90630 (562) 795-5200 (800) 854-3218 FAX (562) 795-7554
SHURflo EAST, 52748 PARK SIX COURT, ELKHART, IN 46514 (219) 262-0478/(800) 762-8094/FAX 219-262-0478
SHURflo EUROPEAN DIVISION, LIBERTY HOUSE 105 BELL ST., REIGATE, SURREY, UNITED KINGDOM 44-737-242290/FAX 44-737-242282